AC INDUCTIVE SENSORS WELD FIELD IMMUNE

M 12		M 12		M 12	
●	○	●	○	●	○
2 mm	4 mm	2 mm	4 mm	2 mm	4 mm
PTFE Coated Brass		PTFE Coated Brass		PTFE Coated Brass	
				●	

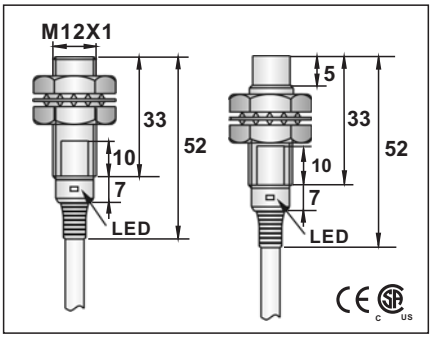

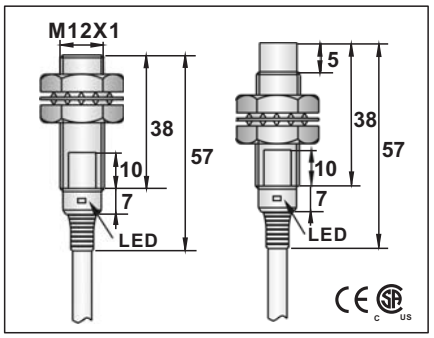

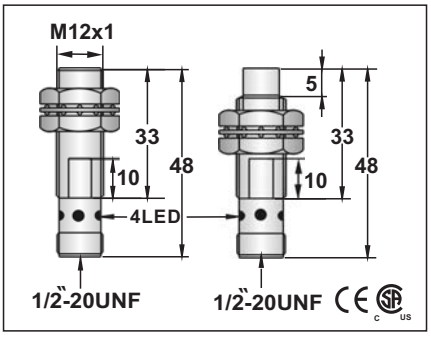

20-250VAC	20-250VAC	20-250VAC
-	-	-
<1.8mA	<1.8mA	<1.8mA
400mA	400mA	400mA
<1.8mA	<1.8mA	<1.8mA
5A(20ms)	5A(20ms)	5A(20ms)
5mA	5mA	5mA
<8VAC AT 400mA	<8VAC AT 400mA	<8VAC at 400MA
<25HZ	<25HZ	<25HZ
10ms/10ms	10ms/10ms	10ms/10ms
<15%(Sr)	<15%(Sr)	<15%(Sr)
<1.0%(Sr)	<1.0%(Sr)	<1.0%(Sr)
IP67	IP67	IP67
-25 °C - +70 °C	-25 °C - +70 °C	-25 °C - +70 °C
<10%(Sr)	<10%(Sr)	<10%(Sr)
NO	NO	NO
-	-	-
-	-	-
RFI>3V/m / EFT>1KV / ESD>4KV (contact)	RFI>3V/m / EFT>1KV / ESD>4KV (contact)	RFI>3V/m / EFT>1KV / ESD>4KV (contact)
IEC 60947-5-2,Part 7.4.1 / IEC 60947-5-2,Part 7.4.2	IEC 60947-5-2,Part 7.4.1 / IEC 60947-5-2,Part 7.4.2	IEC 60947-5-2,Part 7.4.1 / IEC 60947-5-2,Part 7.4.2
ETFE	ETFE	ETFE

WCM1-1202A-A3S2	11	WCM2-1204A-A3S2	WCM1-1202A-A3L2	11	WCM2-1204A-A3L2	WCM1-1202A-AUS3	56	WCM2-1204A-AUS3
WCM1-1202A-B3S2	12	WCM2-1204A-B3S2	WCM1-1202A-B3L2	12	WCM2-1204B-A3L2	WCM1-1202A-BUS3	56	WCM2-1204A-BUS3

4 ϕ 3x0.34		4 ϕ 3x0.34			
Approx.62 g	Approx.60 g	Approx.67 g	Approx.65 g	Approx.25 g	Approx.23 g

Note:
Coming Soon : Part numbers with underline

AC INDUCTIVE SENSORS WELD FIELD IMMUNE

M 12		M 18		M18	
●	○	●	○	●	○
2 mm	4 mm	5 mm	8 mm	5 mm	8 mm
PTFE Coated Brass		PTFE Coated Brass		PTFE Coated Brass	
●		●		●	

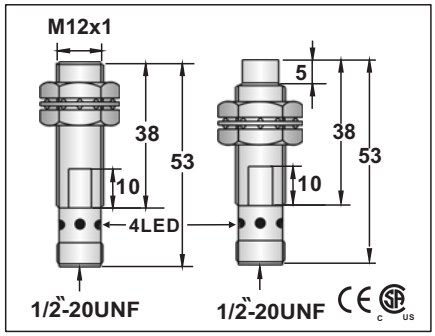

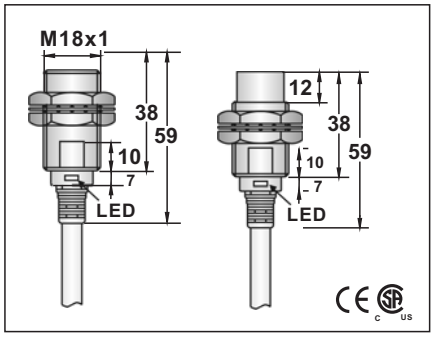

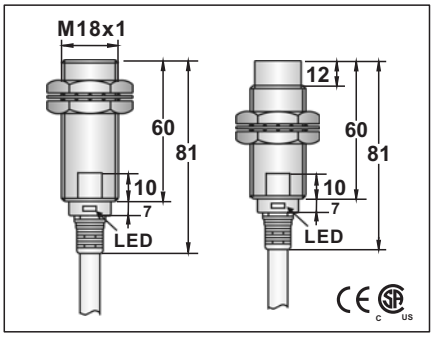

20-250VAC	20-250VAC	20-250VAC
-	-	-
<1.8mA	<1.8mA	<1.8mA
400mA	400mA	400mA
<1.8mA	<1.8mA	<1.8mA
5A(20ms)	5A(20ms)	5A(20ms)
5mA	5mA	5mA
<8VAC at 400MA	<8VAC AT 400MA	<8VAC AT 400MA
<25HZ	<25HZ	<25HZ
10ms/10ms	10ms/10ms	10ms/10ms
<15%(Sr)	<15%(Sr)	<15%(Sr)
<1.0%(Sr)	<1.0%(Sr)	<1.0%(Sr)
IP67	IP67	IP67
-25°C - +70°C	-25°C - +70°C	-25°C - +70°C
<10%(Sr)	<10%(Sr)	<10%(Sr)
NO	NO	NO
-	-	-
-	-	-
RFI>3V/m / EFT>1KV / ESD>4KV (contact)	RFI>3V/m / EFT>1KV / ESD>4KV (contact)	RFI>3V/m / EFT>1KV / ESD>4KV (contact)
IEC 60947-5-2,Part 7.4.1 / IEC 60947-5-2,Part 7.4.2	IEC 60947-5-2,Part 7.4.1 / IEC 60947-5-2,Part 7.4.2	IEC 60947-5-2,Part 7.4.1 / IEC 60947-5-2,Part 7.4.2
ETFE	ETFE	ETFE

WCM1-1202A-AUL3	56	WCM2-1204A-AUL3	WCM1-1805A-A3S2	11	WCM2-1808A-A3S2	WCM1-1805A-A3L2	11	WCM2-1808A-A3L2
WCM1-1202A-BUL3	56	WCM2-1204A-BUL3	WCM1-1805A-B3S2	12	WCM2-1808A-B3S2	WCM1-1805A-B3L2	12	WCM2-1808A-B3L2

		5.0φ44x0.1		5.0φ44x0.1	
Approx.31 g	Approx.30 g	Approx.132 g	Approx.134 g	Approx.153 g	Approx.144 g

Note:
Coming Soon : Part numbers with underline
In Preparation: Part numbers with a line through the middle

AC INDUCTIVE SENSORS WELD FIELD IMMUNE

M 18		M 18		M 18
●	○	●	○	●
5 mm	8 mm	5 mm	8mm	5 mm
PTFE Coated Brass		PTFE Coated Brass		PTFE Coated Brass
●		●		●

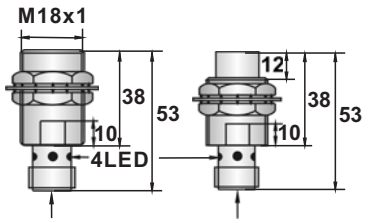

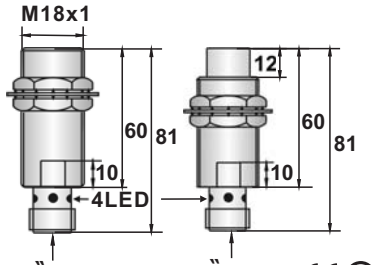

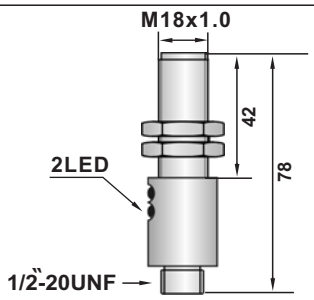

20-250VAC			20-250VAC			20-250VAC	
-			-			-	
<1.8mA			<1.8mA			<1.8mA	
400mA			400mA			400mA	
<1.8mA			<1.8mA			<1.8mA	
5A(20ms)			5A(20ms)			5A(20ms)	
5mA			5mA			5mA	
<8VAC AT 200MA			<8VAC AT 200MA			<8VAC AT 200MA	
<25HZ			<25HZ			<25HZ	
10ms/10ms			10ms/10ms			10ms/10ms	
<15%(Sr)			<15%(Sr)			<15%(Sr)	
<1.0%(Sr)			<1.0%(Sr)			<1.0%(Sr)	
IP67			IP67			IP67	
-25°C - +70°C			-25°C - +70°C			-25°C - +70°C	
<10%(Sr)			<10%(Sr)			<10%(Sr)	
NO			NO			NO	
-			-			-	
-			-			-	
RFI>3V/m / EFT>1KV / ESD>4KV (contact)			RFI>3V/m / EFT>1KV / ESD>4KV (contact)			RFI>3V/m / EFT>1KV / ESD>4KV (contact)	
IEC 60947-5-2,Part 7.4.1 / IEC 60947-5-2,Part 7.4.2			IEC 60947-5-2,Part 7.4.1 / IEC 60947-5-2,Part 7.4.2			IEC 60947-5-2,Part 7.4.1 / IEC 60947-5-2,Part 7.4.2	
ETFE			ETFE			ETFE	
WCM1-1805A-AUS3	56	WCM2-1808A-AUS3	WCM1-1805A-AUL3	56	WCM2-1808A-AUL3	WCM1-1805A-AUS3/2	56
WCM1-1805A-BUS3	56	WCM2-1808A-BUS3	WCM1-1805A-BUL3	56	WCM2-1808A-BUL3	WCM1-1805A-BUS3/2	56
Approx.50 g		Approx.50 g	Approx.94 g		Approx.91 g	Approx.94 g	

Note:
Coming Soon : Part numbers with underline

AC INDUCTIVE SENSORS WELD FIELD IMMUNE

M 18			M 18			M 18		
●	○		●	○		●	○	
5 mm	8 mm		5 mm	8 mm		5 mm	8 mm	
PTFE Coated Brass			PTFE Coated Brass			PTFE Coated Brass		
●			●			●		
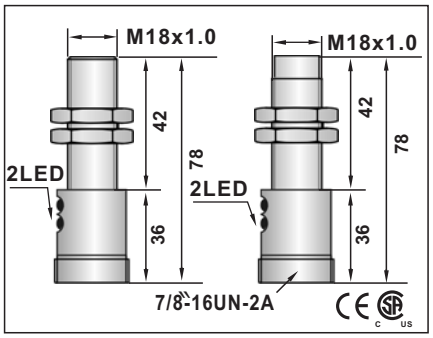			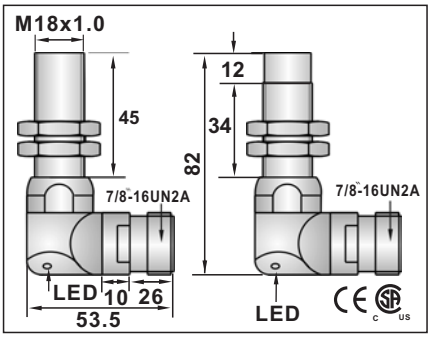			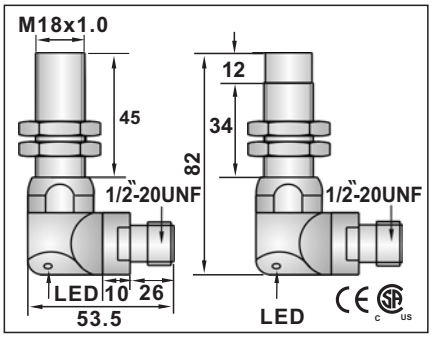		
20-250VAC			20-250VAC			20-250VAC		
-			-			-		
<1.8mA			<1.8mA			<1.8mA		
400mA			400mA			400mA		
<1.8mA			<1.8mA			<1.8mA		
5A(20ms)			5A(20ms)			5A(20ms)		
5mA			5mA			5mA		
<8VAC AT 200MA			<8VAC AT 400MA			<8VAC AT 400MA		
<25HZ			<25HZ			<25HZ		
10ms/10ms			10ms/10ms			10ms/10ms		
<15%(Sr)			<15%(Sr)			<15%(Sr)		
<1.0%(Sr)			<1.0%(Sr)			<1.0%(Sr)		
IP67			IP67			IP67		
-25°C - +70°C			-25°C - +70°C			-25°C - +70°C		
<10%(Sr)			<10%(Sr)			<10%(Sr)		
NO			NO			NO		
-			-			-		
-			-			-		
RFI>3V/m / EFT>1KV / ESD>4KV (contact)			RFI>3V/m / EFT>1KV / ESD>4KV (contact)			RFI>3V/m / EFT>1KV / ESD>4KV (contact)		
IEC 60947-5-2,Part 7.4.1 / IEC 60947-5-2,Part 7.4.2			IEC 60947-5-2,Part 7.4.1 / IEC 60947-5-2,Part 7.4.2			IEC 60947-5-2,Part 7.4.1 / IEC 60947-5-2,Part 7.4.2		
ETFE			ETFE			ETFE		
WCM1-1805A-AZS3/2	65	WCM2-1808A-AZS3/2	WCM1-1805A-AZL3Y	65	WCM2-1808A-AZL3Y	WCM1-1805A-AUL3Y	56	WCM2-1808A-AUL3Y
WCM1-1805A-BZS3/2	65	WCM2-1808A-BZS3/2	WCM1-1805A-BZL3Y	65	WCM2-1808A-BZL3Y	WCM1-1805A-BUL3Y	56	WCM2-1808A-BUL3Y
Approx.251 g			Approx.251 g		Approx.283 g	Approx.251 g		Approx.283 g

Note:
Coming Soon : Part numbers with underline

AC INDUCTIVE SENSORS WELD FIELD IMMUNE

M 18	M 18	M 30	
●	●	●	○
5 mm	5 mm	10 mm	15 mm
PTFE Coated Brass	PTFE Coated Brass	PTFE Coated Brass	
●	●	●	
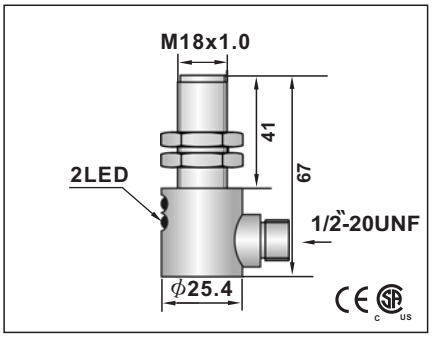	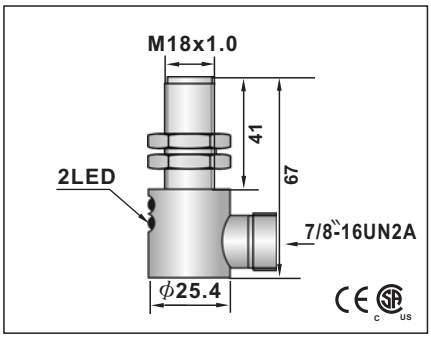	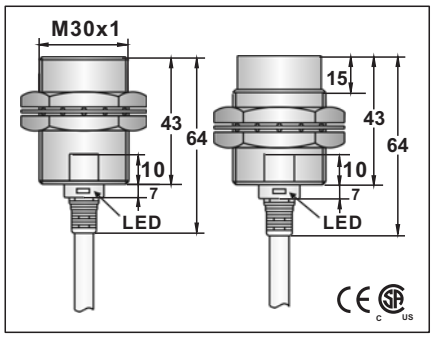	
20-250VAC	20-250VAC	20-250VAC	
-	-	-	
<1.8mA	<1.8mA	<1.8mA	
400mA	400mA	400mA	
<1.8mA	<1.8mA	<1.8mA	
5A(20ms)	5A(20ms)	5A(20ms)	
5mA	5mA	5mA	
<8VAC AT 200MA	<8VAC AT 200MA	<8VAC at 400MA	
<25HZ	<25HZ	<25HZ	
10ms/10ms	10ms/10ms	10ms/10ms	
<15%(Sr)	<15%(Sr)	<15%(Sr)	
<1.0%(Sr)	<1.0%(Sr)	<1.0%(Sr)	
IP67	IP67	IP67	
-25°C - +70°C	-25°C - +70°C	-25°C - +70°C	
<10%(Sr)	<10%(Sr)	<10%(Sr)	
NO	NO	NO	
-	-	-	
-	-	-	
RFI>3V/m / EFT>1KV / ESD>4KV (contact)	RFI>3V/m / EFT>1KV / ESD>4KV (contact)	RFI>3V/m / EFT>1KV / ESD>4KV (contact)	
IEC 60947-5-2,Part 7.4.1 / IEC 60947-5-2,Part 7.4.2	IEC 60947-5-2,Part 7.4.1 / IEC 60947-5-2,Part 7.4.2	IEC 60947-5-2,Part 7.4.1 / IEC 60947-5-2,Part 7.4.2	
ETFE	ETFE	ETFE	
WCM1-1805A-AUS3Y/2 56	WCM1-1805A-AZS3Y/2 65	WCM1-3010A-A3S2 11	WCM2-3015A-A3S2
WCM1-1805A-BUS3Y/2 56	WCM1-1805A-BZS3Y/2 65	WCM1-3010A-B3S2 12	WCM2-3015A-B3S2
		5.8ϕ3x0.5(6.8ϕ5x0.5)	
Approx.251 g	Approx.260 g	Approx.217 g	Approx.207 g

Note:
Coming Soon : Part numbers with underline
In Preparation: Part numbers with a line through the middle

AC INDUCTIVE SENSORS WELD FIELD IMMUNE

M 30		
●	○	
10 mm	15 mm	
PTFE Coated Brass		
●		
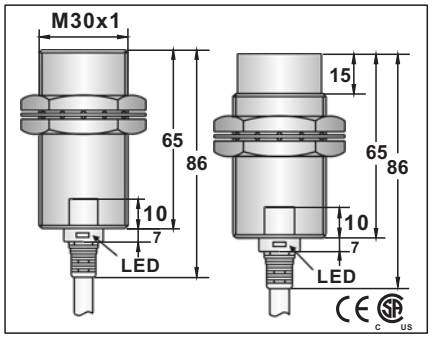		
20-250VAC		
-		
<1.8mA		
400mA		
<1.8mA		
5A(20ms)		
5mA		
<8VAC at 400MA		
<25HZ		
10ms/10ms		
<15%(Sr)		
<1.0%(Sr)		
IP67		
-25°C - +70°C		
<10%(Sr)		
NO		
-		
-		
RFI>3V/m / EFT>1KV / ESD>4KV (contact)		
IEC 60947-5-2,Part 7.4.1 / IEC 60947-5-2,Part 7.4.2		
ETFE		
WCM1-3010A-A3L2	11	WCM2-3015A-A3L2
WCM1-3010A-B3L2	12	WCM2-3015A-B3L2
5.8∅3x0.5(6.8∅5x0.5)		
Approx.227 g	Approx.217 g	

M 30		
●	○	
10 mm	15 mm	
PTFE Coated Brass		
●		
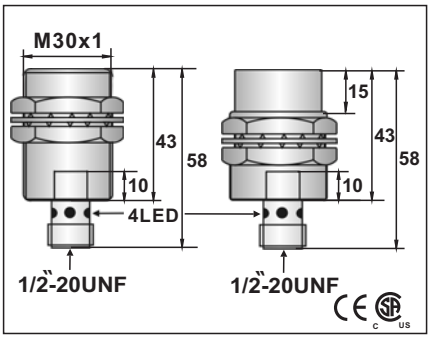		
20-250VAC		
-		
<1.8mA		
400mA		
<1.8mA		
5A(20ms)		
5mA		
<8VAC AT 400MA		
<25HZ		
10ms/10ms		
<15%(Sr)		
<1.0%(Sr)		
IP67		
-25°C - +70°C		
<10%(Sr)		
NO		
-		
-		
RFI>3V/m / EFT>1KV / ESD>4KV (contact)		
IEC 60947-5-2,Part 7.4.1 / IEC 60947-5-2,Part 7.4.2		
ETFE		
WCM1-3010A-AUS3	56	WCM2-3015A-AUS3
WCM1-3010A-BUS3	56	WCM2-3015A-BUS3
Approx.111 g	Approx.121 g	

M 30		
●	○	
10 mm	15 mm	
PTFE Coated Brass		
●		
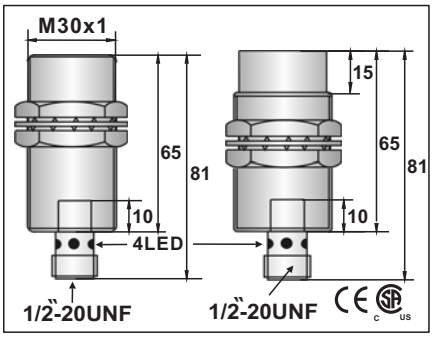		
20-250VAC		
-		
<1.8mA		
400mA		
<1.8mA		
5A(20ms)		
5mA		
<8VAC AT 400MA		
<25HZ		
10ms/10ms		
<15%(Sr)		
<1.0%(Sr)		
IP67		
-25°C - +70°C		
<10%(Sr)		
NO		
-		
-		
RFI>3V/m / EFT>1KV / ESD>4KV (contact)		
IEC 60947-5-2,Part 7.4.1 / IEC 60947-5-2,Part 7.4.2		
ETFE		
WCM1-3010A-AUL3	56	WCM2-3015A-AUL3
WCM1-3010A-BUL3	56	WCM2-3015A-BUL3
Approx.187 g	Approx.179 g	

Note:

Coming Soon : Part numbers with underline

AC INDUCTIVE SENSORS WELD FIELD IMMUNE

M 30			M 30			M 30		
●	○		●	○		●	○	
10 mm	15 mm		10 mm	15 mm		10 mm	15 mm	
PTFE Coated Brass			PTFE Coated Brass			PTFE Coated Brass		
●			●			●		

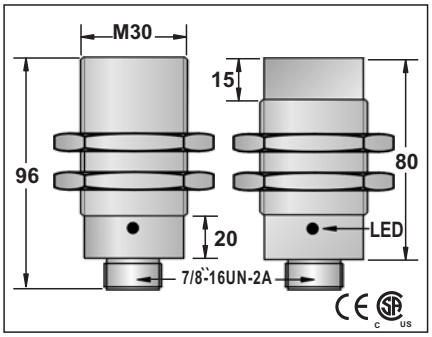

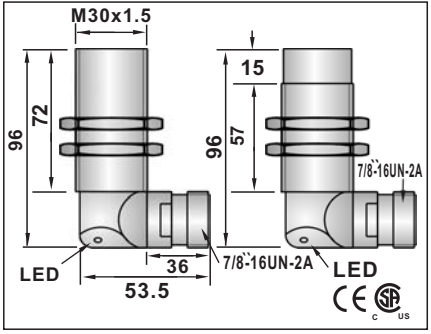

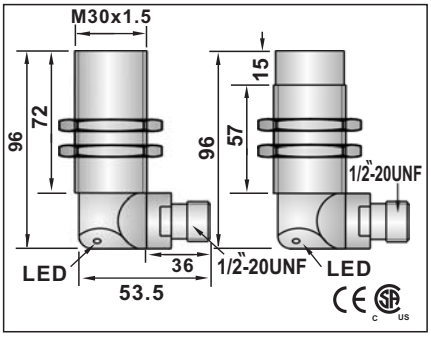

20-250VAC			20-250VAC			20-250VAC		
-			-			-		
<1.8mA			<1.8mA			<1.8mA		
400mA			400mA			400mA		
<1.8mA			<1.8mA			<1.8mA		
5A(20ms)			5A(20ms)			5A(20ms)		
5mA			5mA			5mA		
<8VAC AT 200MA			<8VAC AT 400MA			<8VAC AT 400MA		
<25HZ			<25HZ			<25HZ		
10ms/10ms			10ms/10ms			10ms/10ms		
<15%(Sr)			<15%(Sr)			<15%(Sr)		
<1.0%(Sr)			<1.0%(Sr)			<1.0%(Sr)		
IP67			IP67			IP67		
-25°C - +70°C			-25°C - +70°C			-25°C - +70°C		
<10%(Sr)			<10%(Sr)			<10%(Sr)		
NO			NO			NO		
-			-			-		
-			-			-		
RFI>3V/m / EFT>1KV / ESD>4KV (contact)			RFI>3V/m / EFT>1KV / ESD>4KV (contact)			RFI>3V/m / EFT>1KV / ESD>4KV (contact)		
IEC 60947-5-2,Part 7.4.1 / IEC 60947-5-2,Part 7.4.2			IEC 60947-5-2,Part 7.4.1 / IEC 60947-5-2,Part 7.4.2			IEC 60947-5-2,Part 7.4.1 / IEC 60947-5-2,Part 7.4.2		
ETFE			ETFE			ETFE		
WCM1-3010A-AZL3	65	WCM2-3015A-AZL3	WCM1-3010A-AZL3Y	65	WCM2-3015A-AZL3Y	WCM1-3010A-AUL3Y	65	WCM2-3015A-AUL3Y
WCM1-3010A-BZL3	65	WCM2-3015A-BZL3	WCM1-3010A-BZL3Y	65	WCM2-3015A-BZL3Y	WCM1-3010A-BUL3Y	65	WCM2-3015A-BUL3Y
Approx.187 g		Approx.179 g	Approx.311 g		Approx.356 g	Approx.311 g		Approx.356 g

Note:
Coming Soon : Part numbers with underline

AC INDUCTIVE SENSORS WELD FIELD IMMUNE

M 30	M 30	Q40s
●	●	●
10 mm	10 mm	15mm
PTFE Coated Brass	PTFE Coated Brass	PTFE Coated PBT / ALU
●	●	●
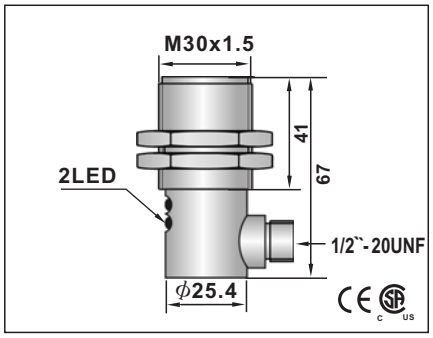	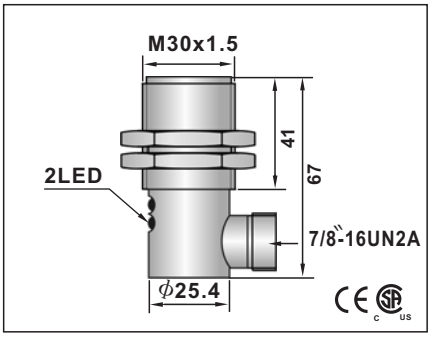	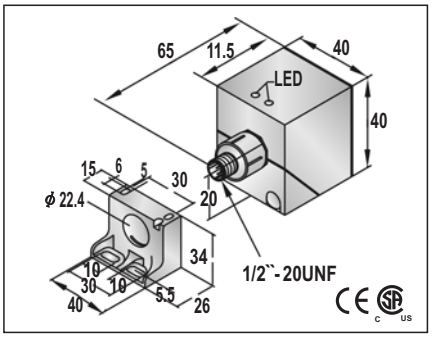
20-250VAC	20-250VAC	20-250VAC
-	-	<10%
<1.8mA	<1.8mA	<10mA
400mA	400mA	200mA
<1.8mA	<1.8mA	<0.01mA
5A(20ms)	5A(20ms)	-
5mA	5mA	-
<8VAC AT 200MA	<8VAC AT 400MA	<1.5V
<25HZ	<25HZ	100HZ
10ms/10ms	10ms/10ms	1ms/1ms
<15%(Sr)	<15%(Sr)	<15%
<1.0%(Sr)	<1.0%(Sr)	<1.0%(Sr)
IP67	IP67	IP67
-25°C - +70°C	-25°C - +70°C	-25°C - +70°C
<10%(Sr)	<10%(Sr)	<10%(Sr)
NO	NO	YES
-	-	220mA
-	-	<10ms
RFI>3V/m / EFT>1KV / ESD>4KV (contact)	RFI>3V/m / EFT>1KV / ESD>4KV (contact)	RFI>3V/m / EFT>1KV / ESD>4KV (contact)
IEC 60947-5-2,Part 7.4.1 / IEC 60947-5-2,Part 7.4.2	IEC 60947-5-2,Part 7.4.1 / IEC 60947-5-2,Part 7.4.2	IEC 60947-5-2,Part 7.4.1 / IEC 60947-5-2,Part 7.4.2
ETFE	ETFE	ETFE
WCM1-3010A-AUL3Y/2 65	WCM1-3010A-AZL3Y/2 65	WQP1-4015A-AUS3 58
WCM1-3010A-BUL3Y/2 65	WCM1-3010A-BZL3Y/2 65	WQP1-4015A-BUS3 58
Approx.250 g	Approx.250 g	Approx.250g

Note:
Coming Soon : Part numbers with underline

AC INDUCTIVE SENSORS WELD FIELD IMMUNE

Q40s		
●		
15mm		
PTFE Coated PBT / ALU		
●		

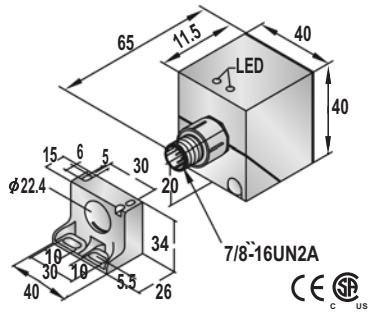

20-250VDC		
<10%		
<10mA		
200mA		
<0.01mA		
-		
-		
<1.5V		
100HZ		
1ms/1ms		
<15%		
<1.0%(Sr)		
IP67		
-25° C - +70° C		
<10%(Sr)		
YES		
220mA		
<10ms		
RFI>3V/m / EFT>1KV / ESD>4KV (contact)		
IEC 60947-5-2,Part 7.4.1 / IEC 60947-5-2,Part 7.4.2		
ETFE		

WQP1-4015A-AZS3	66		
WQP1-4015A-BZS3	66		

Approx.250g		

Note:
Coming Soon : Part numbers with underline